FAT DRAGON GAMES
Copyright ©2013 Fat Dragon Games™
All rights reserved
www.fatdragongames.com

#1	#2	#3	#4	#5
Score/fold dotted lines	Score/fold on reverse side	Cut solid lines	Cut out	Glue this area

PLEASE DO NOT SHARE FILES!
Piracy kills small "mom-'n'-pop" businesses like FDG!

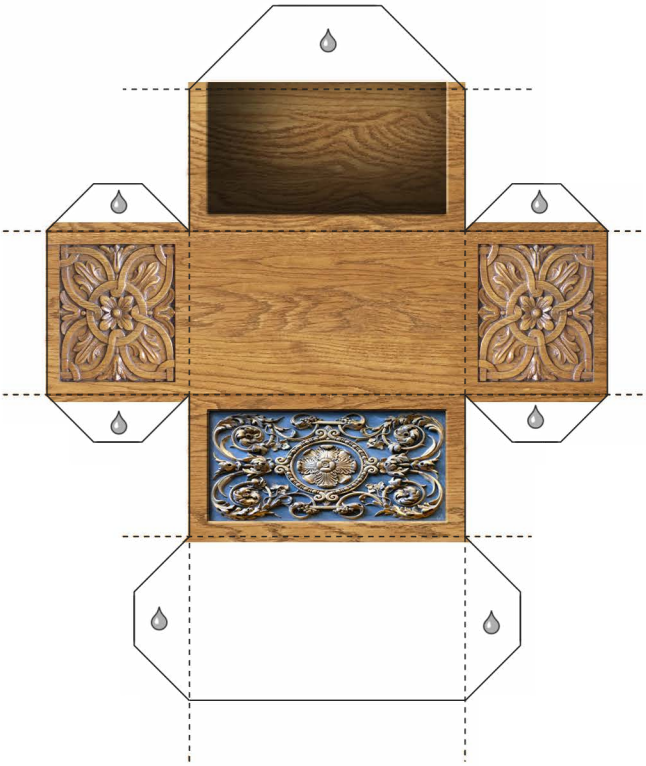

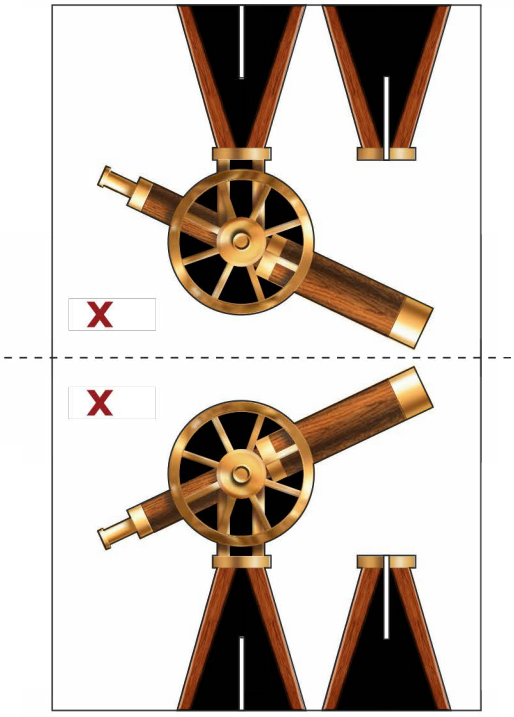

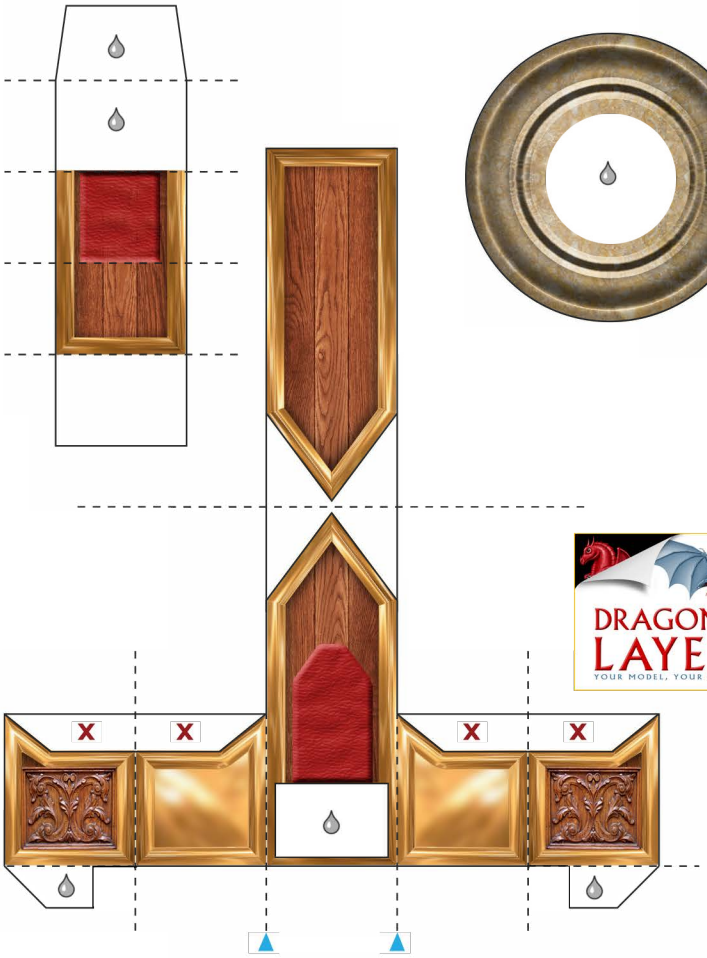

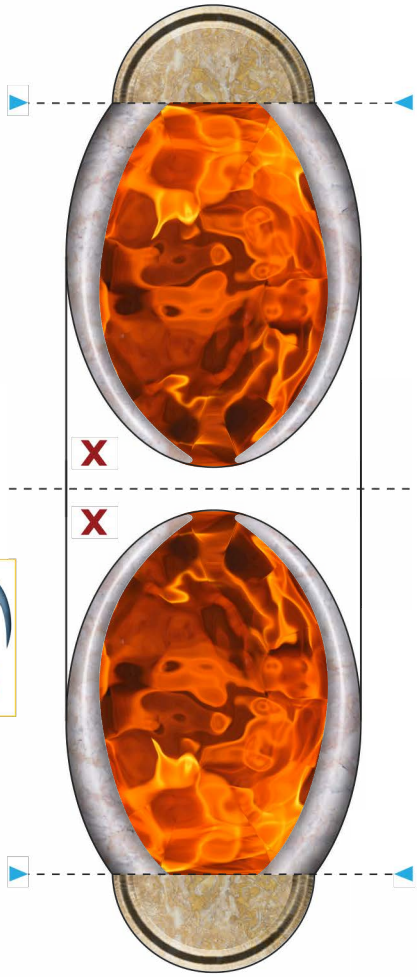

Feed this end into cutter